Rethinking of the Antenna-circuit Boundary for Enabling Millimeter-wave Full-duplex Wireless Communication

Tolga Dinc, Harish Krishnaswamy
Dept. of Electrical Engineering, Columbia University, New York, NY 10027, USA

***Abstract*—This report addresses the research progress towards enabling millimeter-wave full-duplex wireless communication. Millimeter-wave technology has gained significant interest for short-range wireless personal area networks (WPANs), vehicular radar and next generation (5G) cellular communication in the recent years. Full-duplex is another emergent technology which can theoretically double the data capacity by simultaneous transmission and reception on the same frequency channel. This research paper reports recent developments at Columbia University on millimeter-wave full-duplex which merges these two emergent technologies. Specifically, this report will focus on a fully integrated magnetic-free passive circulator enabled by a novel concept of spatio-temporal conductivity modulation.**

***Index Terms*—circulator, non-reciprocity, magnetic-free, simultaneous transmit and receive, full-duplex, 5G.**

I. Introduction

Recently, there has been a significant research interest to use silicon-based millimeter-wave systems in next generation (5G) cellular communication networks as well as vehicular radars. With next-generation (5G) cellular communication on its way, silicon-based millimeter-wave systems are likely to become even more prevalent in the future.

In the context of next-generation cellular networks (5G), a 1000-fold increase in data traffic is projected over the next 10 years as demand for wireless network capacity keeps doubling every year [1]. Solutions for delivering the 1000-fold increase in capacity fall into three main categories: deploying smaller cells (especially in urban settings), allocating more spectrum and improving spectral efficiency. Millimeter-wave frequencies (30-300GHz) allow offer wider than RF, multi-GHz channel bandwidths and are drawing significant research interest as one of the most promising solutions to address the data traffic demands of 5G.

Another emergent technology is same-channel full-duplex, which will be referred to as just full-duplex (FD) in this report. FD can theoretically double the spectral efficiency in the physical layer through simultaneous transmission and reception on the same frequency channel. FD also paves the way for revolutionizing wireless protocol design and hence can offer many other new benefits in the higher layers [2].

Combining FD operation with beam-steering is essential to reveal the true benefits of millimeter-wave full-duplex. Therefore, millimeter-wave low-loss shared antenna interfaces with high linearity, isolation and BW are extremely important in enabling small-form-factor FD shared TX-RX antenna arrays, especially for millimeter-wave 5G base stations that need to communicate with multiple users simultaneously.

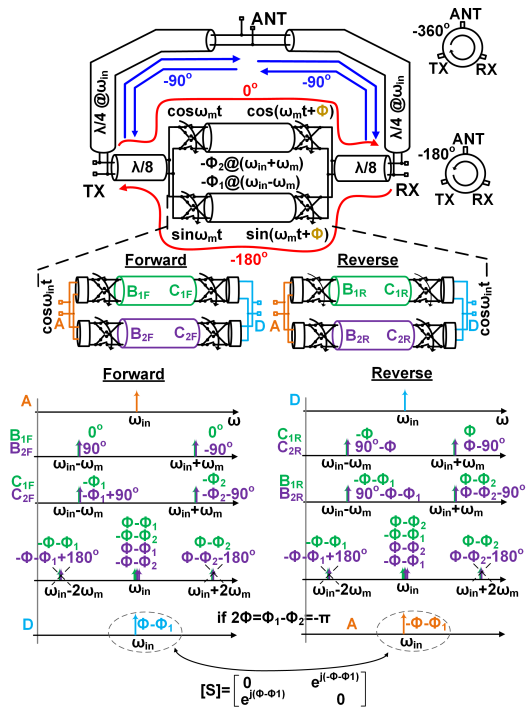

Fig. 1. Magnetic-free passive millimeter-wave circulator based on spatio-temporal conductance modulation.

To this end, we have recently proposed near-28GHz low-loss, wide BW magnetic-free non-reciprocal passive circulator [3] based on spatio-temporal conductivity modulation. It will be discussed in the rest of this research report.

II. 28GHz Magnetic-free Non-reciprocal Passive 45nm SOI CMOS Circulator

Traditionally, circulators have been implemented using ferrite materials. In the recent years, there has been significant progress on breaking reciprocity with time-variance (and without the use of magnetic materials) [4], [5], specifically spatio-temporal permittivity modulation. However, permittivity modulation is inherently weak and therefore is not an effective solution for achieving non-reciprocity on silicon. Poor quality factor of varactors at millimeter-wave further limits the applicability of permittivity modulation at these frequencies. Inspired by the N-path filter-based low-RF CMOS circulator proposed in [6], we recently proposed a near-28GHz fully integrated passive circulator in 45nm SOI CMOS based on the novel concept of spatio-temporal conductivity modulation. Our work marks the first demonstration of magnetic-free passive non-reciprocity at millimeter-wave. Spatio-temporal

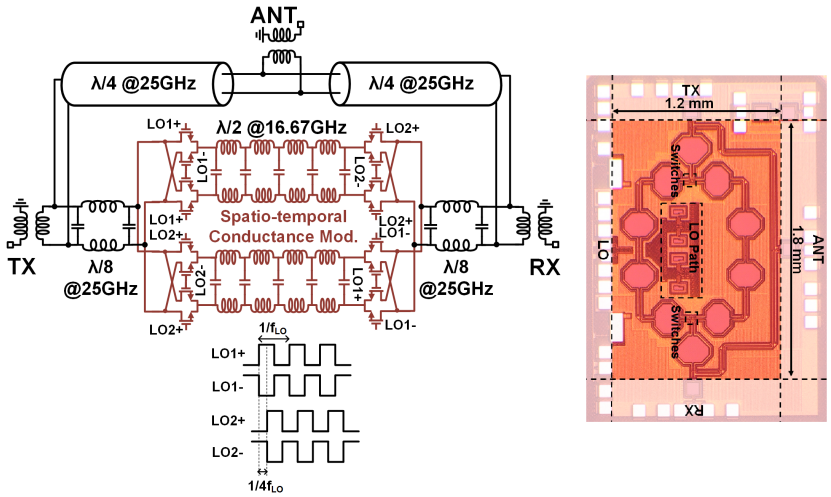

Fig. 2. Block and circuit diagram and chip photo of the near-28GHz 45nm SOI CMOS passive non-reciprocal circulator.

conductance modulation requires modulation at a frequency lower than the operation frequency (1/3rd in this case), thus enabling millimeter-wave operation.

Fig. 1 depicts the spatio-temporal conductance modulation operation based on a simple mixing analysis. It consists of two sets of I/Q switches on either end of I/Q transmission lines. The I/Q switches commutate the signal at a modulation frequency (ω_m) lower than the operating frequency (ω_{in}). As a result two mixing products appear after the commutation, at ω_{in}-ω_m and ω_{in}+ω_m. These signals flow through the transmission line which provides -Φ_1 and -Φ_2 phase shift at ω_{in}-ω_m and ω_{in}+ω_m, respectively. The phase shifted signals are then commutated again at ω_m but with a phase shift of Φ. If Φ=-90° and Φ_1-Φ_2=-180° (or equivalently, $2\omega_m T_d$=π, where T_d is the delay of the transmission line), a non-reciprocal phase shift with 180° difference between forward and reverse directions is achieved. This non-reciprocal phase shift element can now be embedded within a 3λ/4 transmission line ring to realize a non-reciprocal circulator similar to [6].

Fig. 2 shows the implementation at 25GHz. The circulator is implemented in a differential fashion, reducing the LO feedthrough and improving power handling. A two stage poly-phase filter (phase imbalance <2°) and self-biased differential inverter chains are used to generate the 8.33GHz square clocks. The 25GHz circulator achieves 3.3dB/3.2dB TX-to-ANT/ANT-to-RX insertion losses (IL), respectively, and 18.3-21.2dB of TX-to-RX ISO over the 4.6GHz 1dB IL BW. This near-20dB isolation is limited by reflections at the antenna port due to imperfect matching, a challenge for all circulators. The measured ANT-to-RX NF and TX-to-ANT/ANT-to-RX input P1dB are 3.3-4.2dB and >21dBm (Fig. **??**), respectively.

III. Conclusion and Future Work

This paper presented the recent research efforts on millimeter-wave FD and SI at Columbia University, specifically the first millimeter-wave fully-integrated magnetic-free non-reciprocal passive circulator. Topics for future research include techniques to improve the power handling of integrated non-reciprocal circulators, novel integrated antenna tuners for millimeter-wave non-reciprocal circulators, and demonstration of millimeter-wave full-duplex operation within phased arrays.

IV. Career Plan

The MTT-S Graduate Fellowship was further motivation for me to tackle challenging research problems and come up with innovative solutions. I am grateful to the IEEE MTT-S society for this award which has improved the quality of my Phd research. In the near future, I envision a career in the industry to contribute solving real-life problems using the skill-set that I have acquired during my Phd.

Acknowledgment

This work was supported by Global Foundries, DARPA grants FA8650-14-1-7414 and FA8650-16-1-7644, and NSF grant EFMA 1641100.

References

[1] J. Zander and P. Mahonen, "Riding the data tsunami in the cloud: myths and challenges in future wireless access," *IEEE Communications Magazine*, vol. 51, no. 3, pp. 145–151, March 2013.

[2] A. Sabharwal, P. Schniter, D. Guo, D. Bliss, S. Rangarajan, and R. Wichman, "In-band full-duplex wireless: Challenges and opportunities," *IEEE Journal on Selected Areas in Communications*, vol. 32, no. 9, pp. 1637–1652, Sept 2014.

[3] T. Dinc and H. Krishnaswamy, "A 28GHz magnetic-free non-reciprocal passive CMOS circulator based on spatio-temporal conductance modulation," in *to appear in 2017 IEEE International Solid-State Circuits Conference (ISSCC)*, Feb 2017.

[4] S. Qin, Q. Xu, and Y. E. Wang, "Nonreciprocal components with distributedly modulated capacitors," *IEEE Transactions on Microwave Theory and Techniques*, vol. 62, no. 10, pp. 2260–2272, Oct 2014.

[5] N. A. Estep, D. L. Sounas, and A. Al, "Magnetless microwave circulators based on spatiotemporally modulated rings of coupled resonators," *IEEE Transactions on Microwave Theory and Techniques*, vol. 64, no. 2, pp. 502–518, Feb 2016.

[6] N. Reiskarimian and H. Krishnaswamy, "Magnetic-free non-reciprocity based on staggered commutation," *Nature Communications*, vol. 7, no. 11217, April 2016.